Table of contents

The declaration of incorporation 2

1. Introduction 24

2. Marking of the product and its intended use 24

3. General information on installing 25

4. Installation safety and warnings 25

4.1. General rules 25

4.2. Warning and safety signs 26

5. Structure of the drive 27

5.1. Technical data 27

5.2. Construction of the drive and its components 28

5.3. Additional equipment 29

5.4. Installation dimensions 29

5.5. Hazardous areas 29

6. Assembling the drive with the garage doors 30

6.1. Tools for assembly 30

6.2. List of cables 30

6.3. Preliminary checks before assembly 30

6.4. Installation 31

6.5. Electrical connections 33

7. Programming 34

7.1. Final inspection and start-up 35

8. Commissioning 36

9. Replacing components 36

9.1. Replacing the fuse 36

9.2. Replacing the batteries in the remote control 36

9.3. Replacing the drive 37

10. Troubleshooting 37

11. Dismantling and disposal 38

12. Guarantee Card 38

13. Report book 38

1. Introduction

This manual is intended for use only by qualified installers.

The installer who installs the drive, together with the garage doors is responsible for its proper installation and adjustment to ensure proper operation.

The owner of the garage door, after its installation, is provided with:

- user manual
- maintenance manual
- Report Book
- Declaration of Conformity signed by an authorized installer (after functional tests of the garage doors with the drive and making sure that the drive, control and all protection devices work properly).

The garage doors with the drive may not be used until they are commissioned as described in chapter 8: „Commissioning".
In case of any doubt, do not start the assembly, but contact the manufacturer [„Krispol"] to obtain clarifications or local servicing team.

2. Marking of the product and its intended use

Product identification data is presented on the nameplate attached to the drive head. The drive is available in two versions: STARCUS K06 and STARCUS K10.

It is efficient drive with a modern design for automatic operation of sectional garage doors.
It is available in two power versions, suitable for garage doors with a maximum area of 8 m^2 or 18 m^2.

It is equipped with:

- an amperometric system for obstacle detection - after detecting an obstacle, the drive stops the door and reverses its motion,
- a function of soft start and soft stop, preventing strong jerks during opening and closing the door,
- a built-in LED lamp to light the opened garage (three-minute operation),
- overload protection,
- an option of programming the automatic closing,
- LED display for easy programming of functions.

There is a possibility of connecting:

- a micro-switch of service door, which blocks the movement of the door after opening,
- photocells and a function of external emergency disconnection of the drive in case of power failure.

The content of the basic set:

- the drive with a built-in 433.92 MHz radio set,
- 3-channel transmitter,
- rail with a belt or chain (optional)
- mounting elements.

A detailed description of the components is in presented in section 5.2 (see p. 25).
The drive should be installed at a minimum height of 2.5 m above the floor or access level.
The drive can not be used with door having openings with a diameter greater than 50 mm, edges or protruding parts that may be used for standing or gripping.

The drive is suitable for sectional garage doors with the following parameters:

GUIDING N, L, SL, NH, E

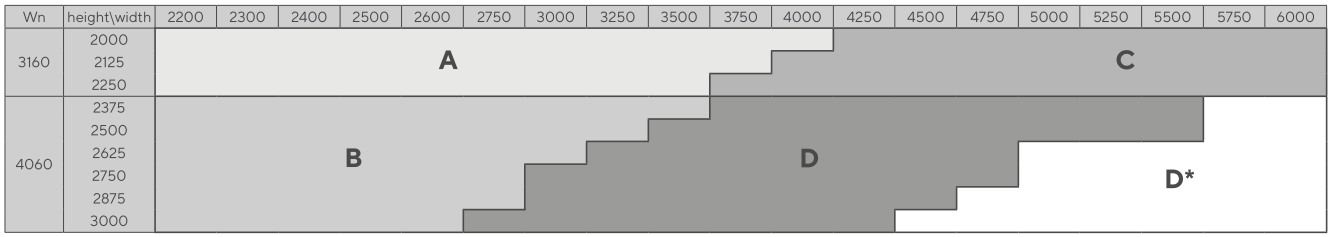

GUIDING H

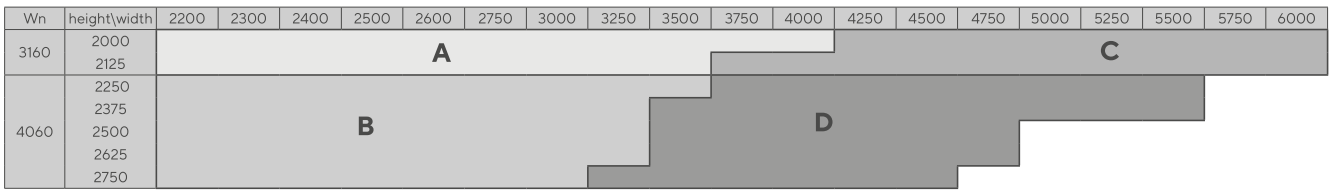

Wn - installation depth in the garage door with a drive
A - 600N, 3100mm
B - 600N, 4000mm
C - 1000N, 3100mm
D - 1000N, 4000mm
D* - Concerns N track system

Any connection of additional elements, programming remote controls, and installation of the drive are described in the following part of the installation manual.

The drive uses electricity and in case of power failure from the mains, it may be unlocked and the door may be operated manually. There is also the possibility of installing an emergency battery, which would allow operation of the drive in case of a power failure from the mains.
The drive with the sectional garage door is designed for use in vehicular and pedestrian applications. It should be installed in residential buildings and it is intended solely for use in individual households. It should not be installed in doors installed in public buildings.
It is unacceptable to install these doors in industrial and commercial facilitates.

The drive is designed for indoor operation. It is prohibited to install the device outdoors and in areas with potentially explosive atmospheres or in those with the presence of flammable liquids, gases or dust. Do not expose the drive to rain or moisture.

! WARNING: Automatic drive.

3. Installation information

The motorized garage door may be fixed to the support structure of an apartment building.

The installation base should be as follows:
- walls - dry and level surface with adequate strength made in accordance with binding building regulations,
- metal structures - correct design and sufficient strength. Depending on the installation base, use the following items:
- dowels - for the base made of reinforced concrete or solid brick,
- self-tapping screws or bolts - for steel structures,
- dowels for cavity bricks and aerated concrete - for a base made of cavity bricks, aerated concrete or similar material.

The precise types and size of fixing elements are determined individually with each customer.
Providing the appropriate fixing elements is the responsibility of the customer ordering the garage doors.
The support structure must ensure proper drilling of holes for fixing elements.

! WARNING! Any deviations from requirements for fixing elements are forbidden, as they may create risks for future users!

The place for installing and operating the motorized garage door should be properly lit and should be selected to ensure safe operation of the garage doors. The owner of the garage door shall be responsible for ensuring these conditions.

- **Mounting components of the drive are supplied with the drive.**
- **It is unacceptable to use other mounting elements than those included in the package.**
- **All electrical connections must be made after the power supply is cut off and with any potential emergency battery disconnected.**

Compliance with the installation procedure described in this manual will ensure the smooth and safe operation of the door with the drive. Improper installation and operation may lead to serious personal injury and property damage.

Before starting the installation process, please read thoroughly the manual. It is unacceptable to make modifications that are not listed in this document. It is prohibited to install the drive for other purposes than those specified in this manual. It is obligatory to use only the included tools and components for fixing and always use the provided fasteners (screws, dowels, screws, nuts) appropriate to the type of fixing and loads generated by the door with the drive.

4. Installation safety and warnings

4.1. General rules

! WARNING: Important safety instructions. Follow all instructions, as improper installation may lead to serious injury.

Before starting the assembly read this manual and observe the following rules for eliminating the risks and take appropriate precautions.

For installation work, use personal protective equipment PPE and technical measures to ensure the safety of yourself, third parties, property and the environment.

Improper installation and operation may lead to serious personal injury and property damage.

- Installation should be performed by trained assembly team with appropriate qualifications and authorized by KRISPOL.
- Adhere to the applicable safety regulations. Particular attention should be paid to the safety when working with electrical devices and at heights.
- The assembly area should be properly marked and secured.
- Features of the assembly surface are described in sec. 3.
- During the assembly works, remember to:
  - assemble materials and tools necessary to perform the work (they are listed in section „Tools and materials");
  - use only original manufacturer's parts;
  - use stable structures for work at height;
  - adequately protect face and hands during drilling;
  - prevent the presence of children near the place of installation works;
  - remove debris and other obstacles that could hinder the movement of the door, before starting it;
  - install a device for manual lock releasing at a height of not more than 180 cm;
  - install the external control unit at a minimum height of 150 cm, in the location ensuring the visibility of the whole area of movement, but not colliding with the movement of the garage doors - away from moving parts.
- First, install all the components, as shown in the drawings - sec. 6.4.
- Before installing the drive, make sure that the temperature range marked on the drive corresponds to local conditions.
- Connect the machine using the plug / socket set. Before connecting the drive, make sure that power supply voltage complies with the requirements of the device to prevent the burnout of its electrical equipment due to insufficient voltage.
- Plugs must match outlets - never change the plug on other than provided by the manufacturer, do not use any additional adapters plugs to connect the drive to the power supply.
- Before any work on the system, cut off the power supply.

In each system we recommend installing at least one warning light. Never modify the automatic drive components.
The installer should provide the user with all the information related to the manual operation of the system in case of failure and also should provide user with the user manual.

After installation:

- Make sure that the mechanism is properly adjusted and that the door moves back or you are able to remove the obstacle when the door touches an object with a height of 50 mm lying on the ground;
- make sure that no part of the door enters a public space, including the pavement and/or road;
- leave the work area in good order, do not leave packaging (foil, polystyrene, etc.) within reach of children as such materials may generate a potential threat,
- pictograms warning against entrapment must be attached in a sustainable manner, near the danger area or close to the controls,
- pictogram indicating the manual release mechanism must be attached next to the mechanism.

Inform the user that the independent dismantling of the drive is unacceptable. These activities may be performed only by professional installers or qualified persons designated by the manufacturer - Krispol.

4.2. Warning and safety signs



DANGER - for the user it means a risk of accidents, including fatal



NOTE - an advice on how to prevent wearing of the product



REMEMBER - key functions or useful information; pay maximum attention to the information marked with this symbol



ADDITIONAL INFORMATION



ELECTRICAL HAZARD



PROHIBITION - do not remove safety devices



COMMANDS - cut off the power supply before starting work on the device or repairs



WARNING - risk of entrapment of a child staying close to a moving garage door.
Keep children away from the moving garage door.

5. Structure of the drive

5.1. Technical data

! NOTE! The product can be operated only after the installation process is fully completed which should be ended by a full final inspection - see sec. 7.1.

Technical data of STARCUS Drive			
Parameter	**Unit**	**Drive**	
		K06	**K10**
Type	-	The drive for the automation of garage doors	
Power supply		230VAC (+10%) 50Hz	
Electric motor			
Standby Power	W	<0,5	
Maximum input power	W	150	
Power consumption	A	0,7	
Pulling power	N	600	1000
Lighting	-	LED	
Lighting working time	s	180	
Emitted sound pressure level	dB(A)	max 70	
Permissible ambient temperature	°C	-20 to +50	
Relative humidity	%	≤ 90	
Frequency of the receiver	MHz	433,92	
The maximum distance from the ceiling	mm	1000	
Normal speed without load	cm/s	16	
Maximum frequency of cycles	%	DE 40%	
Maximum continuous working time	s	60	
Protection level	IP		

Technical data of the transmitter		
Parameter	**Unit**	**Transmitter**
Type	-	3-channel transmitter, remotely
Frequency	MHz	433,92
Coding	-	Variable code system
Buttons	szt.	4
Diode		
Power supply	V	3
Battery type	-	1 x 2032
Capacity	mAh	220
Permissible ambient temperature	°C	-20 to +50

5.2. Construction of the drive and its components

The drive is equipped with:

- control board,
- gear motor,
- a push-button panel with display,
- LED lighting.

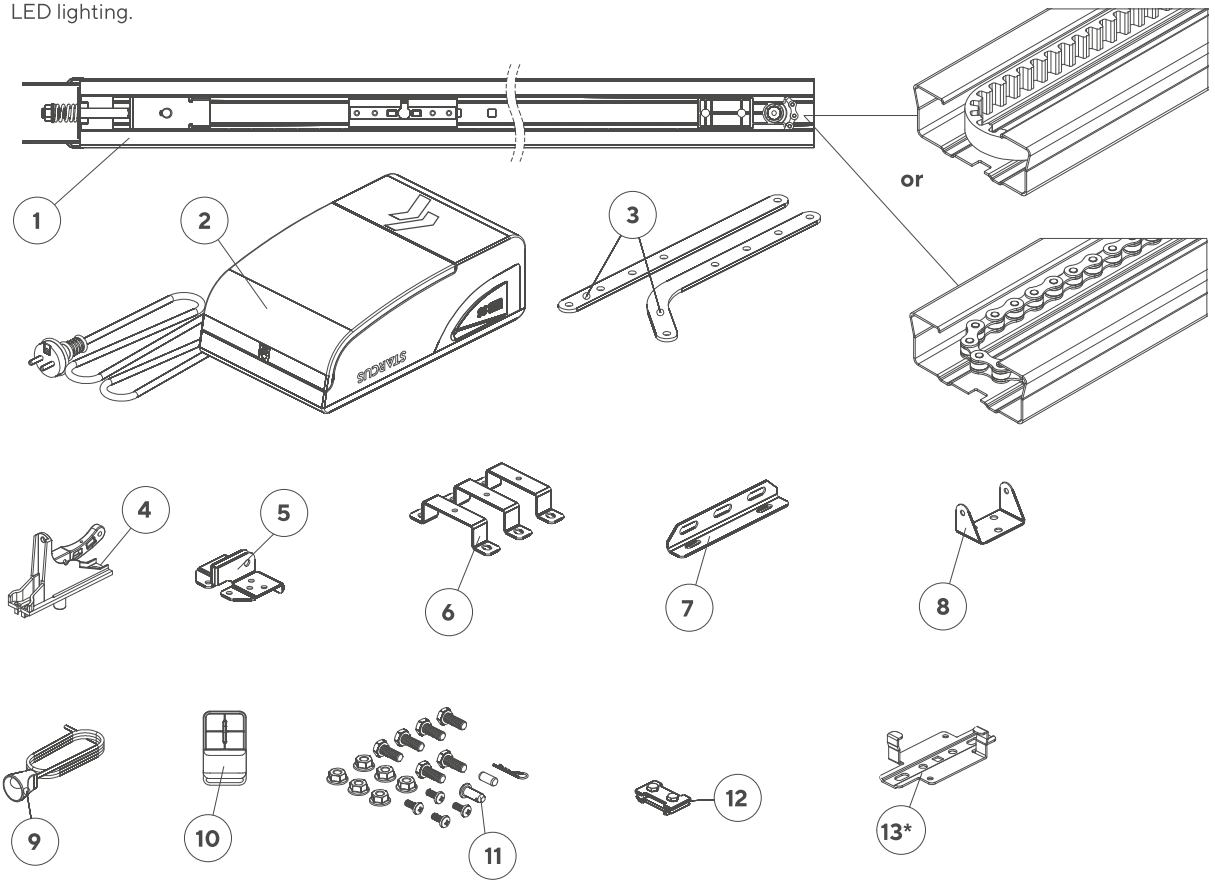

1 - rail
2 - drive head
3 - drawbar
4 - carriage handle
5 - fastener for fixing the draw bar to a panel
6 - fastener for fixing the drive to the rail
7 - rail mounting element
8 - a fastener for fixing the rail to the lintel
9 - unlocking string
10 - transmitter
11 - minor elements
12 - rail lock
13 - rail suspension
* - option

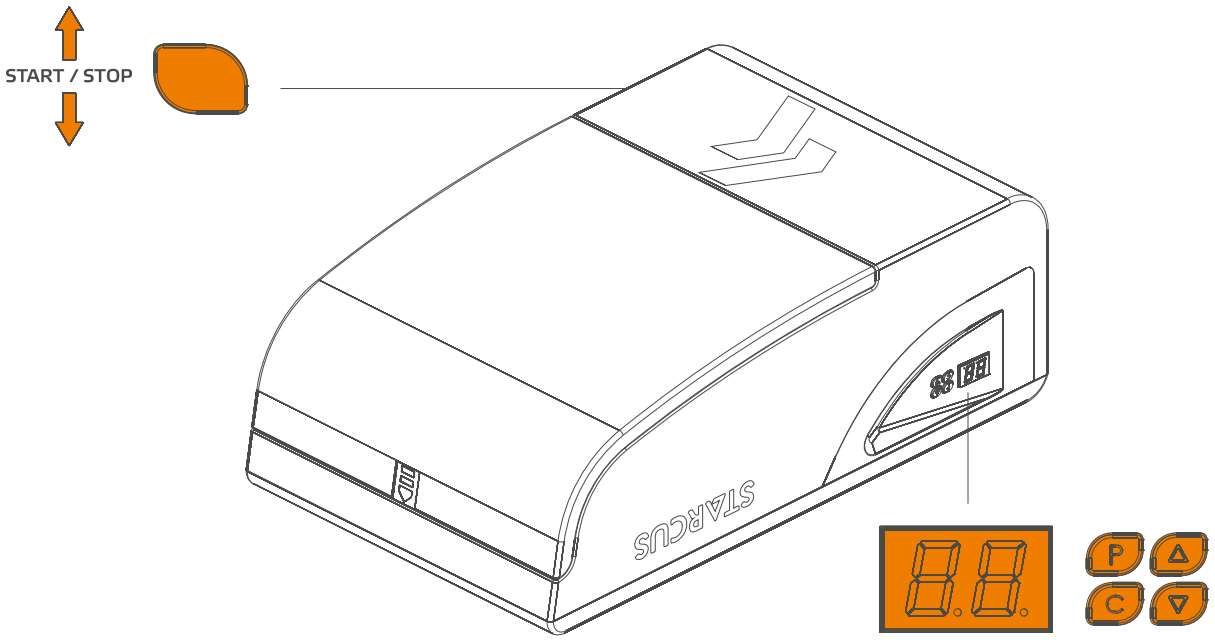

5.3. Additional equipment

Additional equipment consists of:

- key switch
- Bell button connector
- photocells
- reed switch (for sectional garage doors equipped with service door).

5.4. Installation dimensions

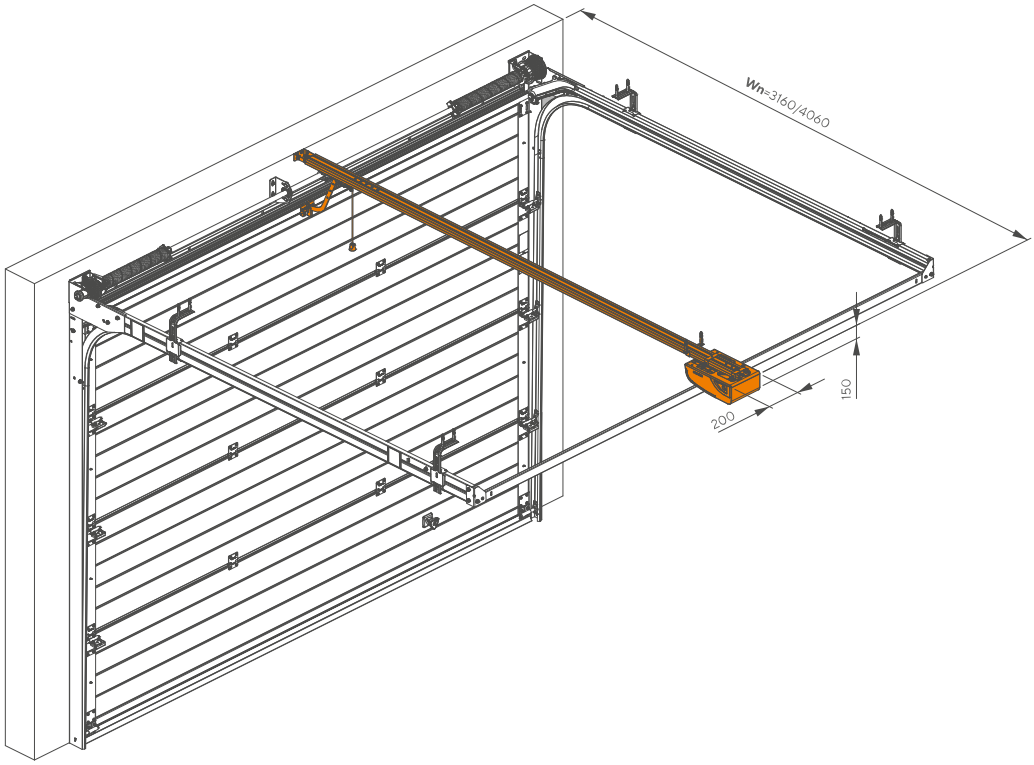

5.5. Hazardous areas

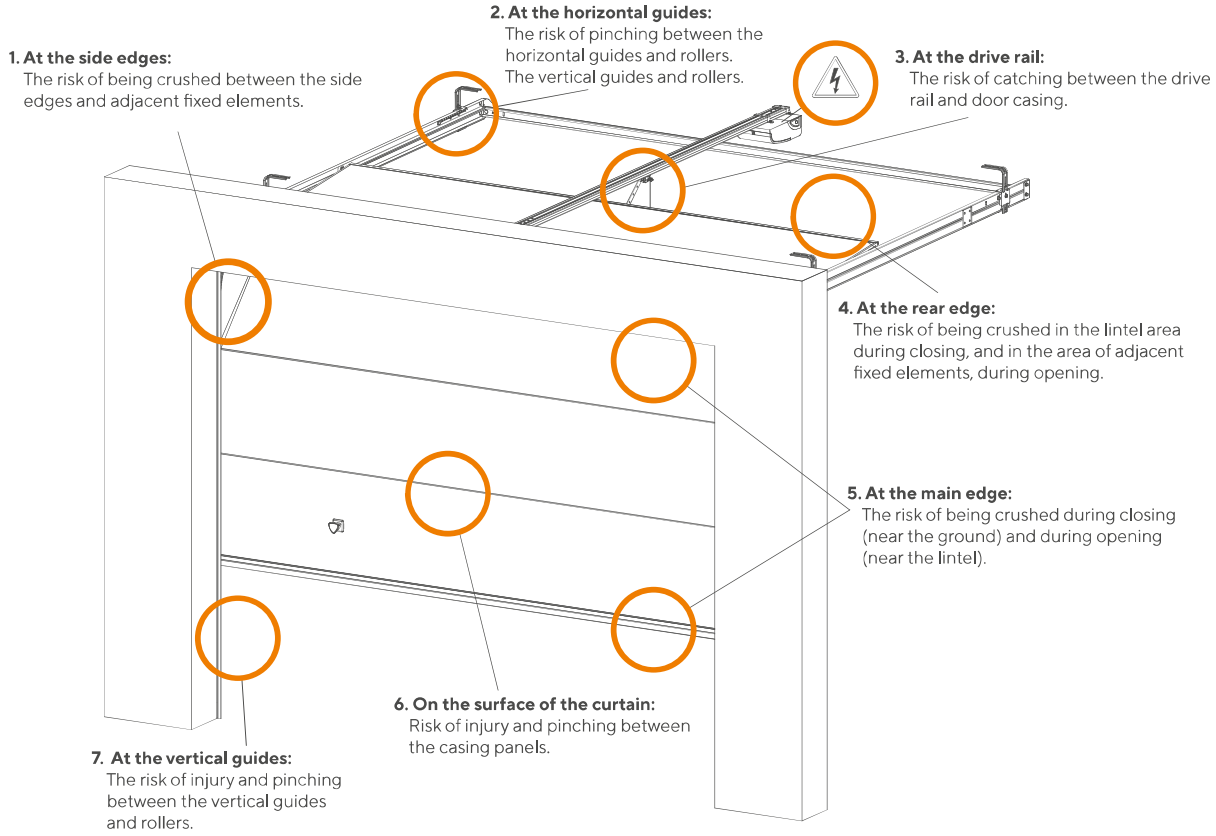

6. Installing the drive with the garage door

6.1. Tools for assembly

For mounting K06/K10 drive, you need the following tools:

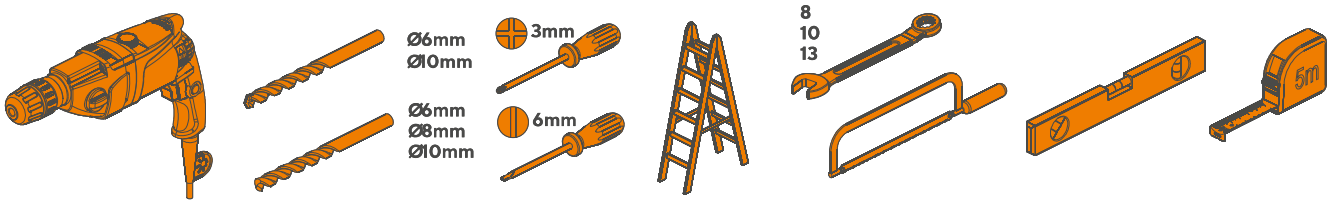

* A hammer drill with appropriate drill bits for concrete and metal.

6.2. List of cables

The table below shows the characteristics of the cables required to connect various devices (accessories).

Connection	Cable type
photocells	cable 2/4x0,5 mm²
key switch or button switch	cable 2x0,5 mm²
beacon	cable 2x0,5 mm²
reed switch / STOP	cable 2x0,5 mm²

Use only cables of proper insulation class.

All work on the electrical system should be performed by qualified person.

A grounded electrical socket of 230 V should be installed near the door drive. Loose wires cannot touch the moving elements of the door and the automatic drive.

6.3. Preliminary checks before installation

The drive must be installed by qualified personnel in compliance with current legislation, standards, regulations and according to this manual.

- Before the installation, check that all the components and materials to be used are in perfect condition, suitable for use and in accordance with the standards. Make sure you have chosen the correct model, and that the product is suitable for installation in a given environment.
- Check whether the floor (structure) for mounting the garage door and the drive has been properly prepared.
- The drive should be installed at a minimum height of 2.5 m above the floor or access level.
- If the door base (construction object) is not properly prepared, do not start the installation works, as they may generate safety risks for door users or damage the product.
- After installing the garage door, make that sure all the sliding route during closing and opening, has no areas of increased friction.
- Check the strength of the mechanical locks and check for potential danger of door jumping out of its guides.
- Check that the mechanical structure of the door is sufficiently stable and make sure there is no risk of door falling out of its guides.
- Make sure that the door moves without resistance.
- Make sure the door is well balanced - the door set (manually) in one position can not move.
- Set the door manually in the Opening and Closing position, ensuring that the entire movement has equal and uniform friction at each point (there should be no place requiring more force).
- Make sure that the places of mounting individual elements of the drive are safe and provide protection against accidental impacts.
- Make sure that the selected surfaces for fixing the photocells are flat and suitable for a good alignment of the photocells.
- Check whether the minimum and maximum gaps are as indicated on the drawing(s).

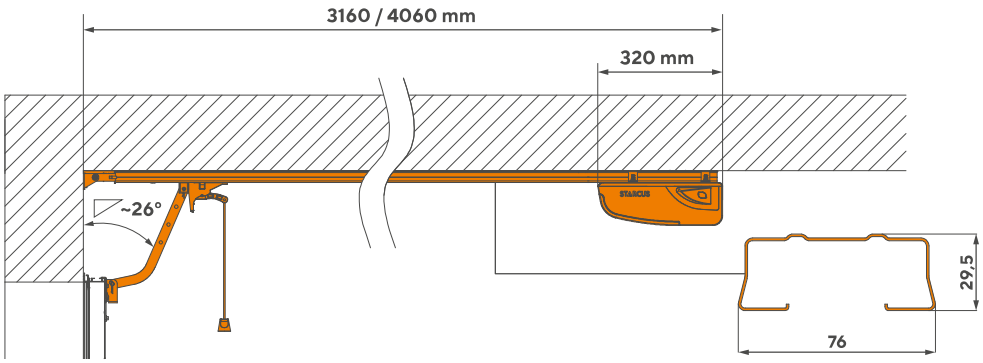

The mounting location should be kept clean and should be tidied up after installation. The future users should be trained.

The control element, which activates the support function (the function requires constant pressing of the control element by the operator) should be located in a place where the driven part is directly seen but away from moving parts. The installation height of the control element should be at least 1.5 m and be convenient for maintenance. The fixing point should be inaccessible to the public.

Before starting the installation of the drive, make sure that there are no entrapment areas between the door and its fixed parts during opening.

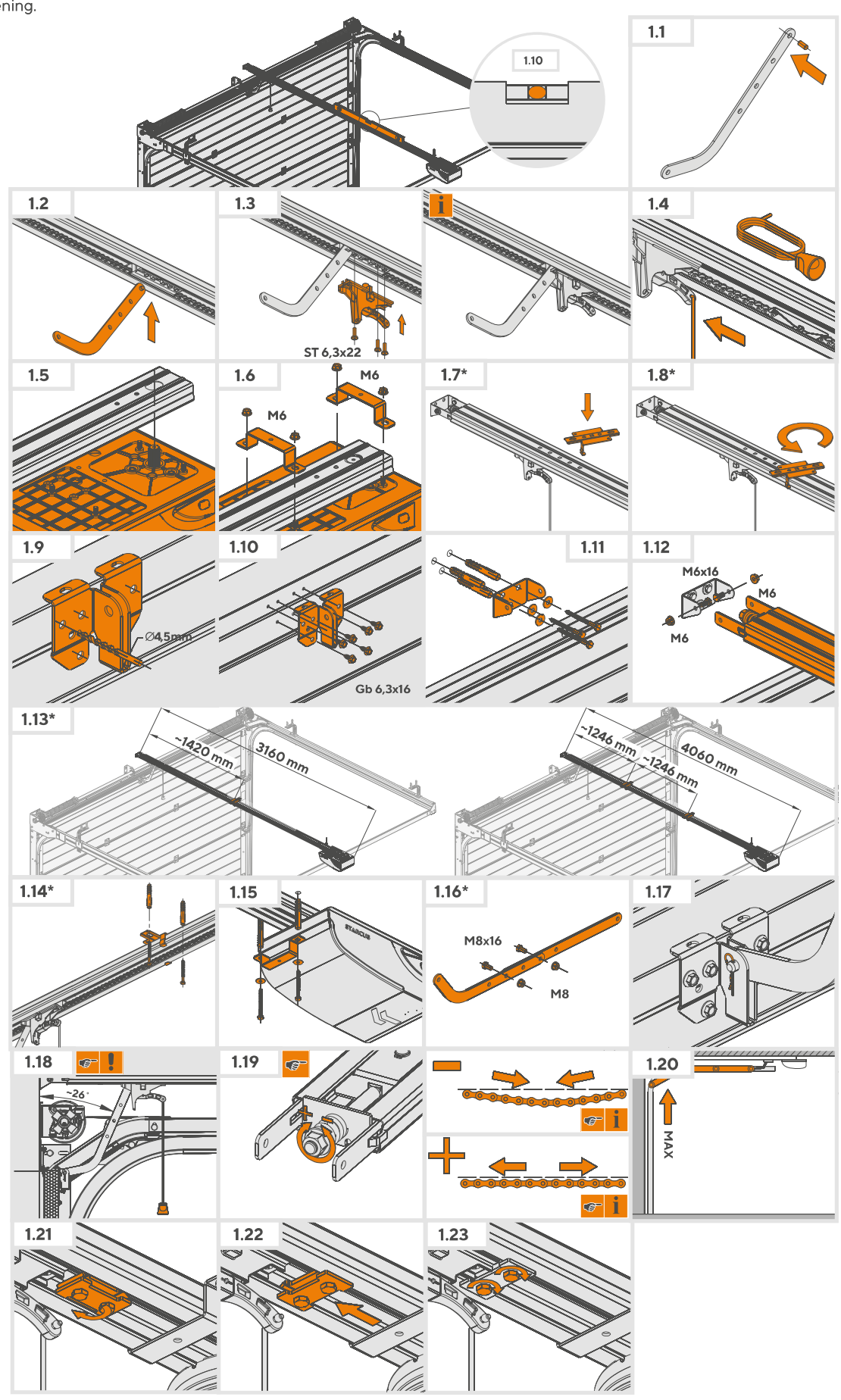

* - option

Electrical wires should be arranged as shown in Fig.

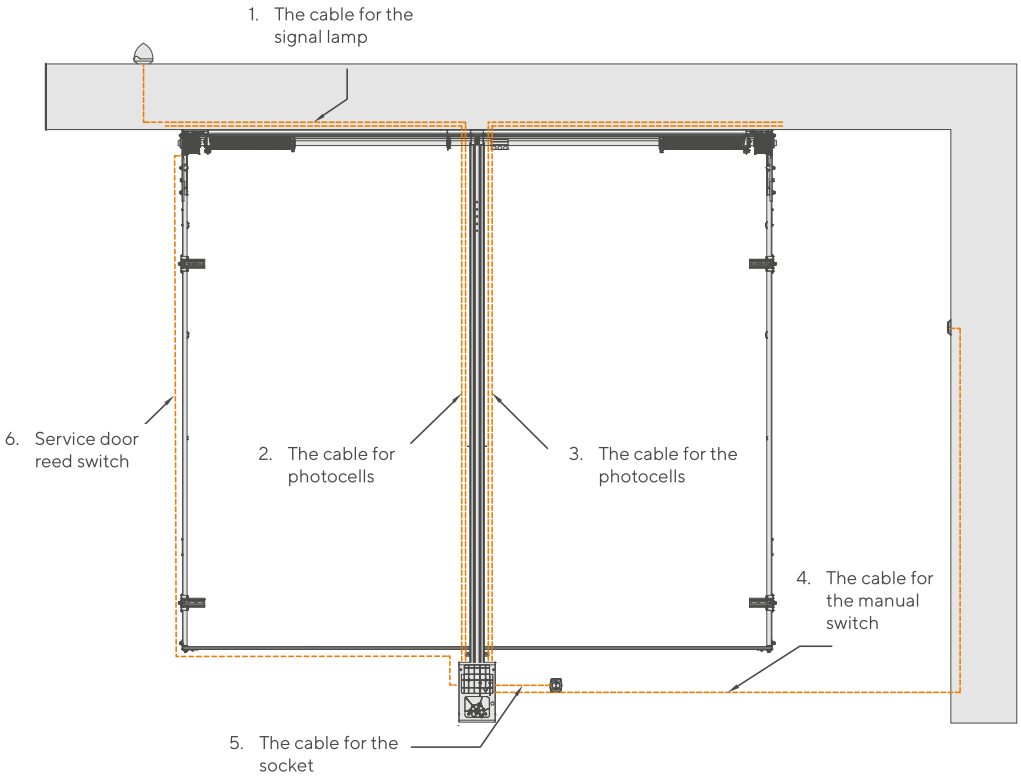

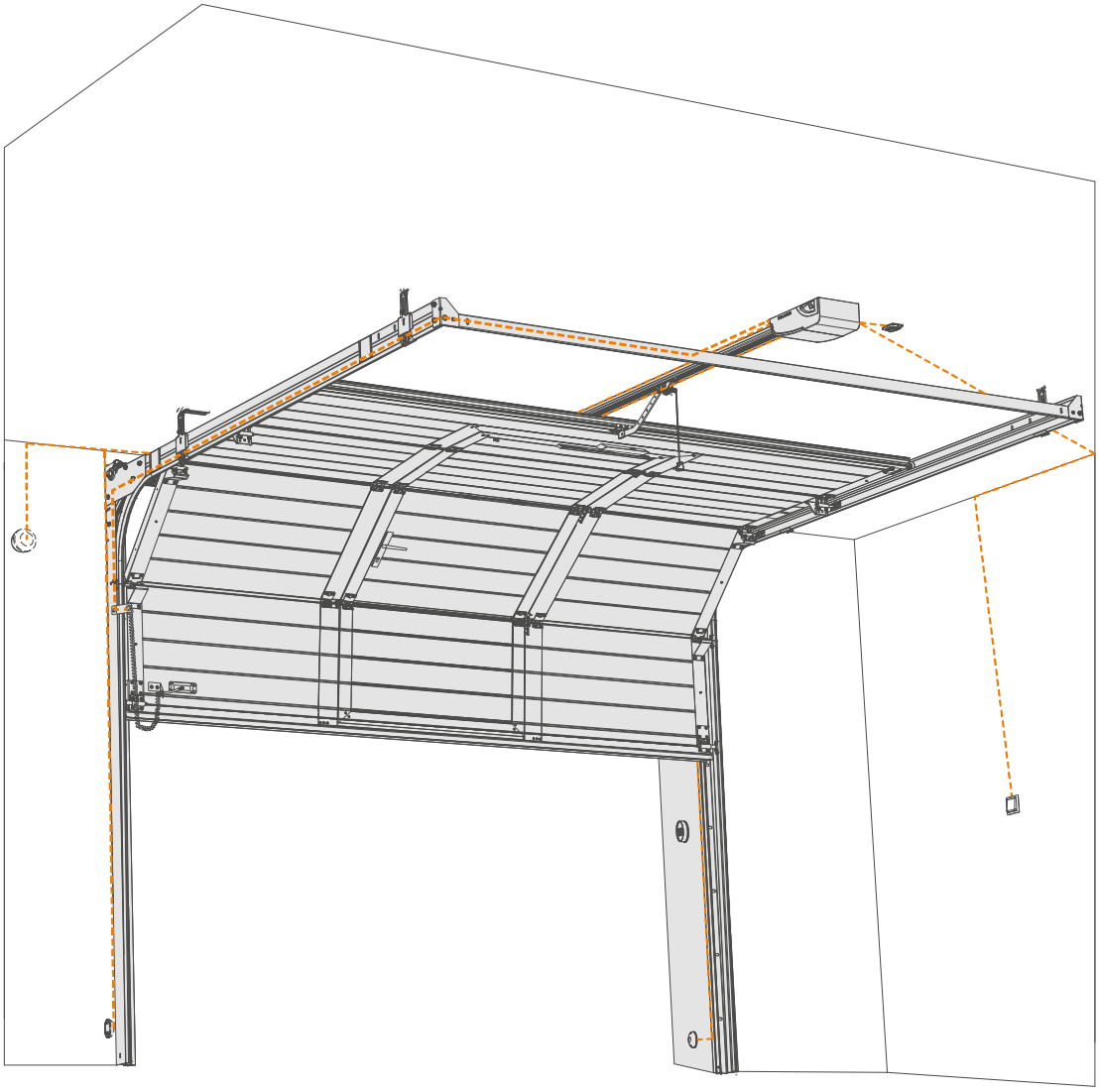

All electrical connections must be made after the power supply is cut off and with any potential emergency battery disconnected.

IMPORTANT! Before starting any work on the control panel (connection, maintenance), always cut off the power supply.

To connect an external control, safety and signalling device, use openings provided for this purpose (sealed with gaskets) in the control unit housing.

Install the electrical connections according to the diagram shown in the figure below.

Wiring diagram of the control board				
Pulse switch	Photocells	Lamp	Reed switch / STOP	Emergency battery

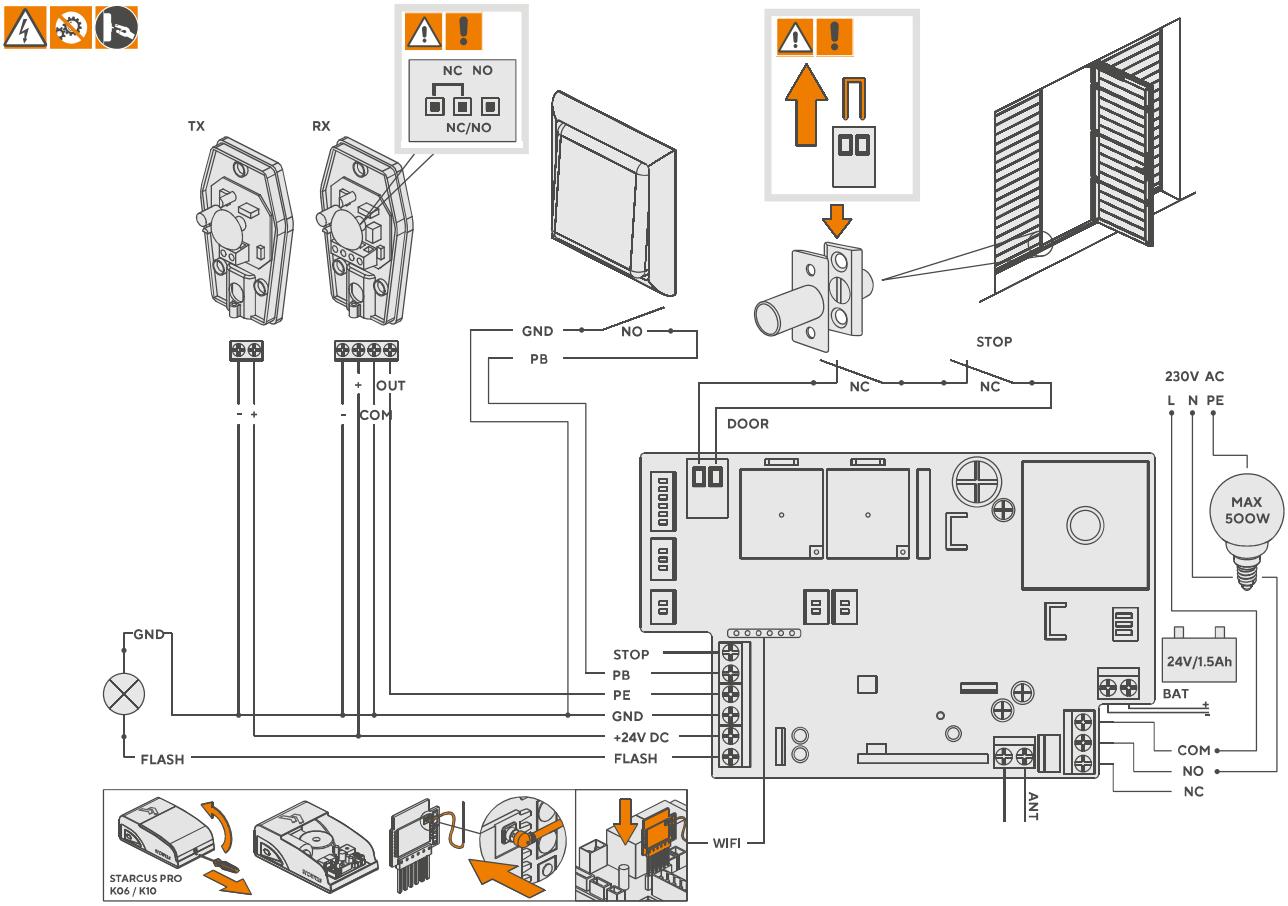

After installation, make sure that electrical wires do not touch the moving parts of the garage door. Check the status of inputs and make sure that all safety devices are properly connected.

Program the drive using the control panel (see sec. 7):

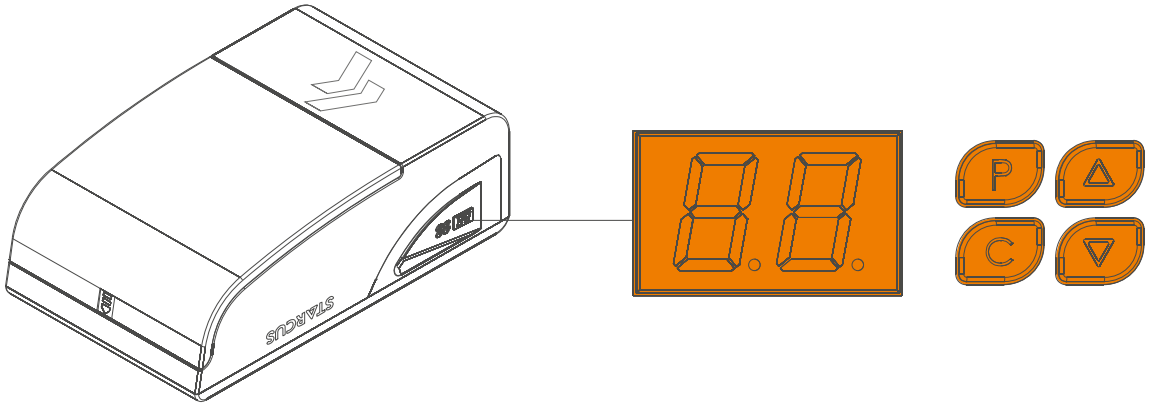

7. Programming

PREPARATION		
1	The lever releasing the carriage is set in the horizontal position, move the door manually	
2	Turn on the power, the lamp lights up when the display shows a value from '99' to '11'	**99 - 11**
3	The display shows the standby position '- -'	**--**
SETTING THE OPENING AND CLOSING POSITION		
1	Press and hold the "P" button, until 'P1' is displayed	**P1**
2	Press the "P' button again, 'OP' will be displayed	**OP**
3	Press and hold down the "Δ" button, during opening process 'OP' flashes	**OP**
4	Release the "Δ" button when the opened position is reached	
5	Use "Δ" and "∇" buttons to adjust the opening position	
6	Press 'P", 'CL' will be displayed	**CL**
7	Press and hold down the "∇" button, during opening process 'CL' flashes	**CL**
8	Use "Δ" and "∇" buttons to adjust the closing position	
9	Press "P", the door will open and close automatically to establish the required normal mechanical force. '- -' will be displayed at the end	**--**
ADDING REMOTE CONTROLS.		
1	Please press the "C" button, 'Su' will be displayed.	**Su**
2	Select and press the button on the remote control.	
3	Press the same button again to confirm. 'SU' will start flashing, and then you will see '- -'.	**SU**
4	Repeat the above steps to add additional eKey remote controls. The memory may store the maximum of 20 remote controls. An attempt to add another remote control will result in displaying 'FU'	
DELETING REMOTE CONTROLS		
1	Note: This feature will delete all remote controls	
2	Press and hold the "C" button for 8 seconds. 'dL' will be displayed.	**dL**
ADJUSTING THE MECHANICAL FORCE		
1	Press and hold the "P" button, until 'P1' is displayed	**P1**
2	Press the "Δ" button once. 'P2' will be displayed	**P2**
3	Press "P" again. The current force settings will be displayed. Simultaneously, press "Δ" or "∇" to increase or decrease the force value by one step. The maximum value is 'F9', while the minimum is 'F1'. Press P to confirm.	
4	The default settings is 'F3'	**F3**
ENTER LOW POWER MODE		
1	Press and hold the SET button until the display shows "P1";	**P1**
2	Press the UP button 7 times to display "E0" then press the SET button to enter low power mode;	**E0**
3	The sequence "d0-d1-d2" will be displayed. Use the UP or DOWN buttons to select the desired setting:"d0" Low power mode disabled (accessories will function correctly). "d1" Enters low power mode after 1 minute ofinactivity (factorydefault setting). "d2" Enters low power mode after 10 minutes ofinactivity.	**d0 - d2**
4	After selecting the desired option, press the SET button to confirm the setting.	
5	The motor comes from the factory with the low power mode enabled (mode "d1"), After 1 minute of inactivity, the motor automatically enters this mode, cutting off the 24 VDC power supply. As a result, theconnected accessories will stop working.	
6	Warning: Before installing any accessories, it is mandatory to disable the low powermode; otherwise, they will not function correctly.	
PHOTOCELL ACTIVATION AND DEACTIVATION		
1	Press and hold the P button until 'P1' is displayed	**P1**
2	Press the "Δ" button twice. 'P3' will be displayed	**P3**
3	Press the "P" button to see to the status of the photocell. 'H0' means that it is OFF, 'H1' means that is ON	**H0 - H1**
4	Press the "Δ" button to activate. 'H1' will be displayed.	**H1**
5	Press the "∇" button to inactivate. 'H0' will be displayed.	**H0**
6	Press P button to confirm and exit.	
7	Note: If the photocells are not installed, make sure that the above-mentioned function is disabled. Otherwise, the operating mechanism will open, but it will not close.	
AUTOMATIC CLOSING		
1	Press and hold the P button until 'P1' is displayed	**P1**
2	Press the "Δ" button three times. 'P4' will be displayed	**P4**
3	Press the "P" button to display the status of the automatic closing. 'b0' means no automatic shutdown, while 'b9' means the maximum closing.	**b0 - b9**
4	Press the "Δ" button to increase or "∇" to decrease the delay by one minute.	
5	Press P button to confirm and exit.	
LOCKING THE REMOTE CONTROL		
1	Press and hold the P button until 'P1' is displayed	**P1**
2	Press the "Δ" button four times. 'P5' will be displayed	**P5**
3	Press "P" again. The current setting will be displayed: 'uL' - no lock of the remote control.	**uL**
4	Press the "Δ" button once. 'Lc' will be displayed - indicating the activation of the lock of the remote control.	**Lc**
5	Press P button to confirm and exit.	
VENTILATION - AIRING		
1	Press and hold the P button until 'P1' is displayed.	
2	Press the **Δ** button five times. 'P6' will be displayed.	
3	Press the P button again. The current setting 'r0' will be displayed - ventilation not active. Press the **Δ** and **∇** s buttons simultaneously to increase or to decrease this value by one level. The maximum value is 'r9'; the minimum value is 'r0'. Press P to confirm.	**r0 - r9**
4	Enable the ventilation option by pressing the CH1 and CH2 buttons simultaneously	
OUTDOOR LIGHTING TIME SETTINGS		
1	Press and hold the P button until 'P1' is displayed	**P1**
2	Press the **Δ** button six times. 'P7' will be displayed	**P7**
3	Press P again. The current setting 'L0' will be displayed - external lighting timeswitch is not active. The maximum value is 'L4'; the value changes by 30 seconds	**L0 - L4**
4	Press P to confirm.	
FACTORY SETTINGS RESTORE		
1	Press the P button six times. The drive head will reset automatically.	

Opening the garage door
uL – opening of the door by pressing a pre-programmed button in the appropriate channel.
Lc – opening of the door by pressing a button with the padlock symbol and then a pre-programmed button in the appropriate channel.
Closing the garage door
uL/Lc – pressing a pre-programmed button in the appropriate channel.
Cautions and Warnings
Operate the garage door only when you see everything within its moving range. Do not allow children to play with control mechanisms. Make sure that people are not within the range of moving garage door. The same applies to animals or objects. The drive is designed for indoor installation and operation. The garage door and the control mechanism should be serviced every year. **Restoring the factory settings of the mechanical force involves steps described in "Adjusting the mechanical force".**

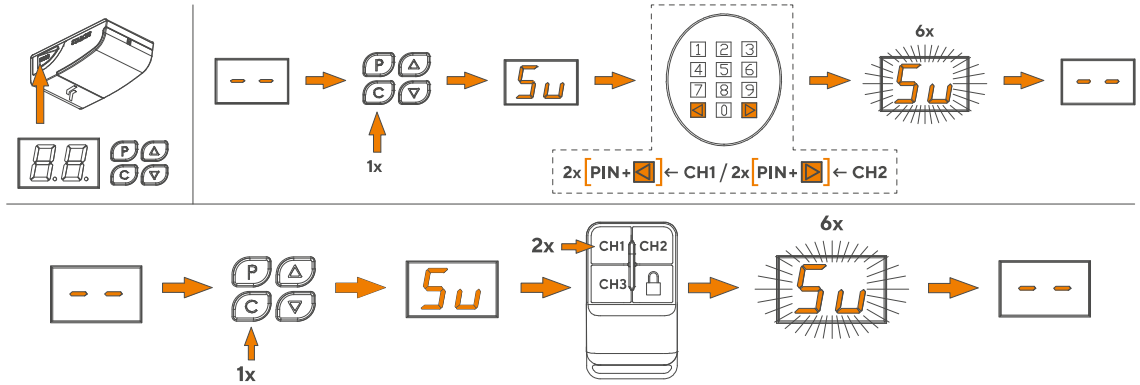

7.1. Final inspection and start-up

This is the most important stage of the drive installation process and is intended to ensure maximum safety.

After determining the position of opening and closing, it is recommended to perform several manoeuvres to check the correct movement of the garage door:

- Press the button on the remote control to open the door; Check whether door opening is smooth with no jerks or speed changes. The garage door should open completely. The drive should stop when the door is in the fully opened position.
- Press the button on the remote control to close the door; Check whether door closing is smooth with no jerks or speed changes. The garage door should close completely. The drive should stop when the door touches the ground.
- If the drive is installed with a beacon lamp (optional) to check if the lamp flashes in cycles of ... seconds ON and ... seconds OFF.
- If the drive is to be installed along with photocells check whether the system works correctly.
- If the drive is installed with the garage door equipped with a service door, check the reed switch for correct operation. The user should not be able to open the garage door when the service door is not closed properly. Perform the test run.
- Set an obstacle in the closing area and start the closing operation. Check whether the amperometric protection works properly. The door wing after colliding with the obstacle should stop and change its movement direction (in opening direction).
- Perform several opening and closing manoeuvres to detect any defects in the assembly or improper adjustment, e.g. moments of increased friction.
- Check whether the fixing of the drive, guide and all mechanical components is strong, stable and durable.
- Verify that the system can detect an obstacle with a height of 50 mm, lying on the ground.

Attach a label informing about the possibility and method of using the manual release mechanism of the door near the mechanism.

Attach a warning sticker (Fig. ... sec. 4.2 and below) in a visible place near the garage door or in the vicinity of the control system.

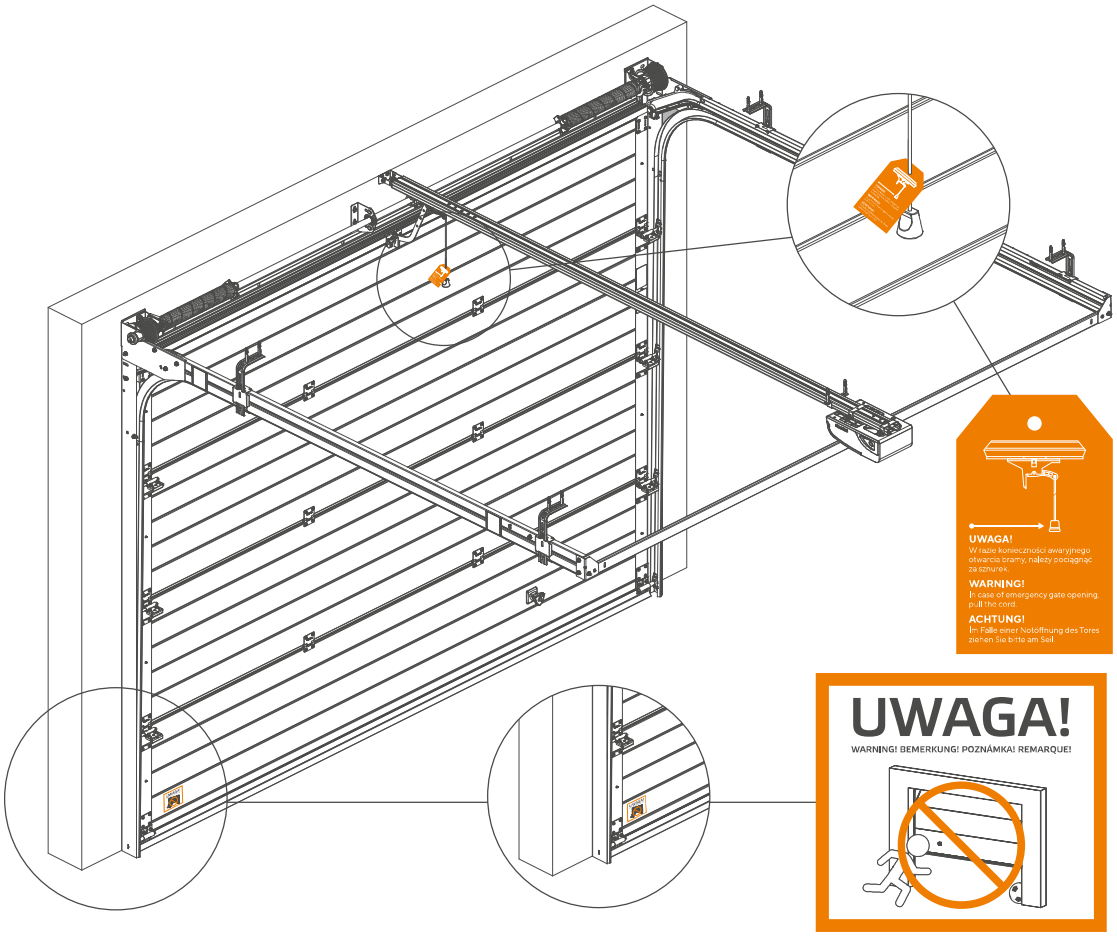

After completing:

- a full check of correct installation and operation of the garage door with the drive,
- electrical measurements,

legibly fill out all the necessary forms in the Report Book, which is an integral part of the garage door manual.

Provide the user with the manual, introduce the principle of the system and show how to release and lock again the manual release mechanism.

Sign the declaration of conformity and provide it to the user.

8. Commissioning

Commissioning may take place only after a positive result of all the stages of the acceptance, according to the provisions of sec. 7.1.

A partial or ‚temporary' commissioning is prohibited.

Check whether all the warning pictograms are attached and verify that the drive and the garage door have a nameplate.

The end user should be trained in using controls, maintain mechanisms of the door and in their adjustment, technical aids, rules of maintenance, repair and compliance with health and safety during the operation of the door and drive in accordance with the requirements of manual and the Report Book.

Commissioning primarily involves: training of users, demonstrating the operation and providing the manual of the door with the drive along with the regular maintenance manual, Report Book and EC/EU declaration of conformity signed by the installer for the drive with the door.

9. Replacing components

Replacing components may be carried out after cutting off the power supply by removing the plug from the socket.

The works presented below should be performed by qualified servicing team, preferably the same, which conducted the installation of the drive.

9.1. Replacing the fuse

Before replacing the fuse, cut off the power supply by pulling the plug out of the socket.

Replace the fuse with a new one. The drive uses a miniature fuse of 2.5 A F.

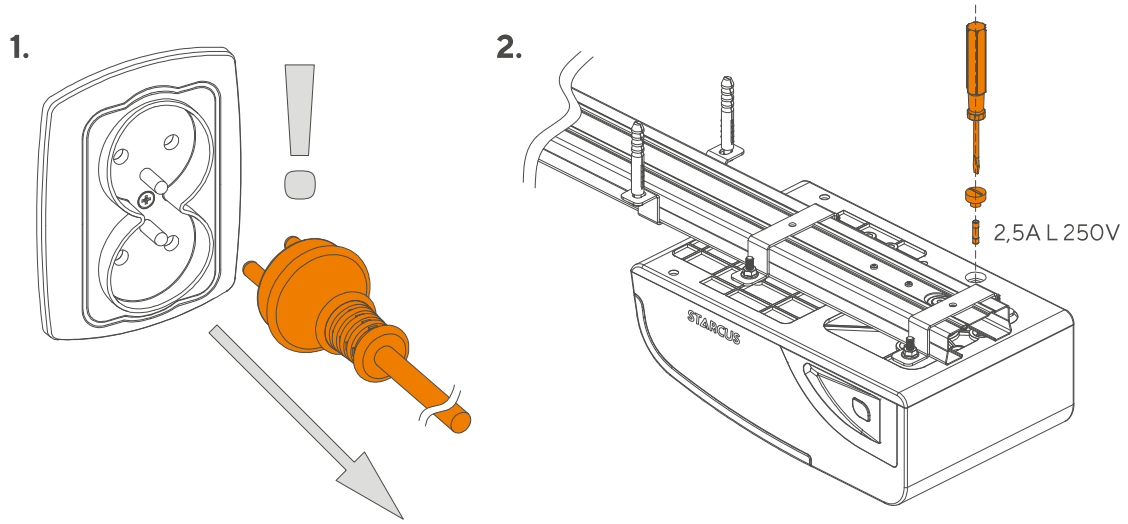

9.2. Replacing the batteries in the remote control

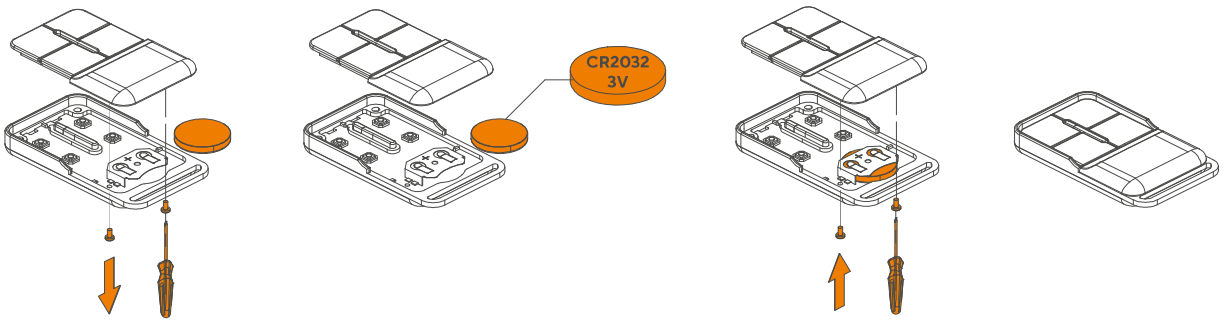

9.3. Replacing the drive

Replacing the entire drive requires removing the drive and disconnecting the wires from the control board. Activities should be carried out in reverse order to the installation operations.

After mounting the drive, all the checks described in sec. „Final inspection and start-up" should be carried out.

Add what else may be replaced by the installer.

10. Troubleshooting

In order to find a cause of any potential defect, use the short instruction manual and test the door manually. Check the operating mechanism for proper operation when the door is disconnected.

Problem	Possible cause	Remedy
1. Loud chain.	1. The chain is loose.	1. Tighten M8 nut on the spring.
2. The motor does not respond.	2. Power supply failure, loose plug, triggered fuse.	2. Check the electrical network. Check or replace the fuse with a fuse of the same type.
3. The door opens but does not close.	3. Faulty photocell (if fitted).	3. Perform the test after removing the photocell (please refer to the programming section).
4. The motor operates after pressing the activation button, but it does not work when activated by the remote control.	4. Defect of the remote control or discharged battery.	4. Replace the battery in the remote control. If two or more remote controls do not work, replace the control board.
5. Remote control range is short.	5. Discharged battery of the remote control.	5. Replace the battery in the remote control.
6. The door does not close completely and opens again, or does not open completely.	6. The operating mechanical force is too low.	6. Perform a manual test of the garage door. Gently increase the operating mechanical force of the door (please refer to the programming section).

! Any work on electrical equipment unit may be performed only by a person with appropriate and valid license.

	Error Code	Error Description	Remedy
1.	**H**	No signal from Hall sensor.	Check the encoder cable – ensure it is properly connected, then reset the limit positions. Try moving the J7 connector on the control board, or replace the head unit.
2.	**C**	Motor overload.	Verify the manual operation of the gate.
3.	**o**	Motor operation time exceeded.	Reconfigure the limit positions, or alternatively set the limits 1 meter above the floor and check if the gate moves within the intended range.
4.	**L**	Limit position error.	Make sure the carriage is engaged. Reset the limit positions again.
5.	**Ir**	Photocell error.	Incorrect connection of photocells.
6.	**Lo**	Voltage too low.	Check the supply voltage (ensure it is not too low), or replace the head unit.
7.	**LP**	Incorrect voltage.	Head unit replacement required! The low-voltage protection is activated, or the power module related to low-voltage protection is damaged. The error will automatically disappear once the voltage returns to a normal level. If the error persists, the head unit must be replaced.
8.	**Lc**	Automatic transmitter lock.	The transmitter lock option is enabled – press the "lock" button first, then the control button. Parameter P5.
9.	**FU**	No memory available for pairing remotes (max. 20).	A universal receiver must be purchased – model: ODB.KK.001
10.	**88**	Damaged control board.	Head unit must be replaced.

11. Dismantling and disposal

As in the case of installation, the dismantling steps must be performed by qualified technical personnel.

During the disposal, follow the safety regulations concerning the dismantling of electrical equipment, recycling electronics and procedures for preventing environmental contamination.

All parts of the device must be segregated and subject to proper disposal.

! NOTE: The electrical waste must be disposed to authorized collection points.

12. Guarantee Card

- The Guarantee Card is an integral part of the manual.
- Remember to fill the Guarantee Card during the commissioning of the drive with the garage door.

13. Report Book

- The Report Book is an integral part of the manual.
- Remember to fill the Report Book during the commissioning of the drive with the garage door.